Amazon Web Services: Elastic Block Store (EBS) and Elastic File System (EFS)

Topics

- What is EBS?
- EBS Features
- EBS Volume Types
- IOPS vs. Throughput
- Volumes and Snapshots
- Protecting EBS Volumes with Encryption
- EC2 Hibernation
- AMIs
- EBS vs. Instance Store
- EFS
- FSx

What is EBS?

- Stands for Elastic Block Store
- Storage volumes you can attach to EC2 instances
- Virtual hard disk attached to EC2 instance
- Used in the same way as a system disk:
  - Create a file system
  - Run a DB
  - Run an OS
  - Store data
  - Install applications
- A Virtual disk in the cloud

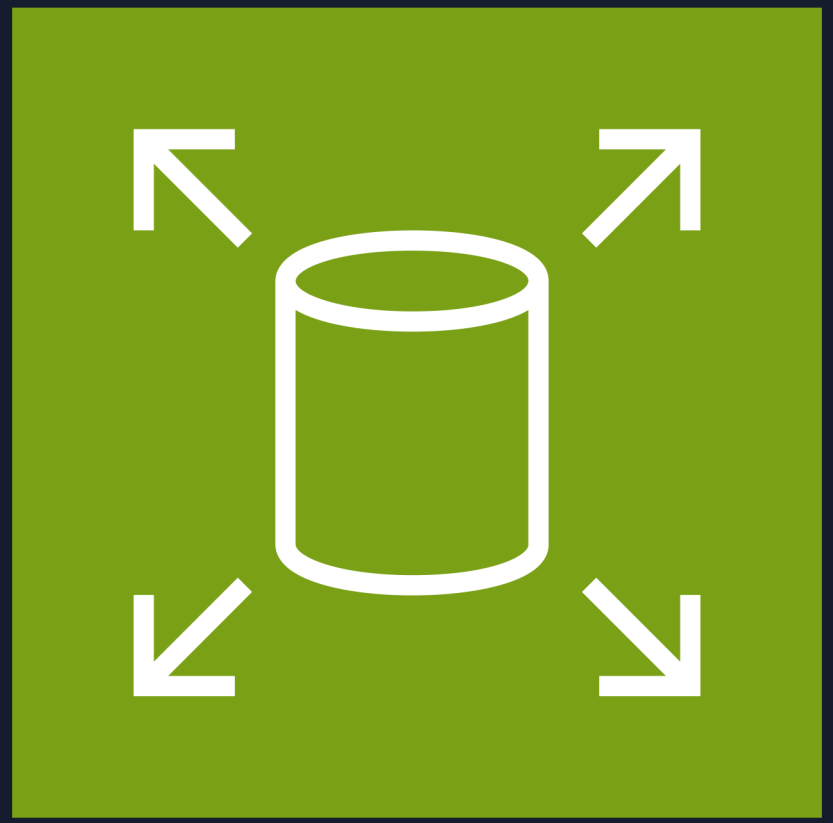

Amazon Elastic Block Store (Amazon EBS)

EBS Features

Production Workloads

Designed for mission-critical workloads

Highly Available

Automatically replicated within a single AZ to protect against hardware failures

Scalable

Dynamically increase capacity and change the volume type with no downtime or performance impact to live systems

EBS Volume Types

- Divided into two major categories
  - SSD-backed storage for transactional workloads (DBs, virtual desktops and boot volumes)
  - HHD-backed storage for throughput intensive workloads (MapReduce and log processing)

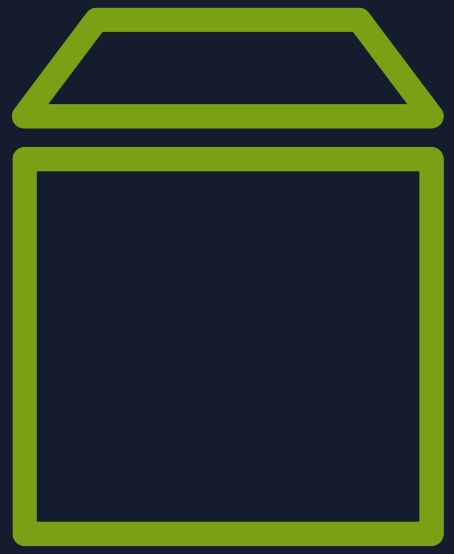

Volume

https://aws.amazon.com/ebs/volume-types/

SSD-backed storage

- General Purpose SSD (gp3 and gp2)
  - Balance of price and performance
  - Use case: boot volume, transactional application such as small databases (MySQL), virtual desktops, test/dev environments, and interactive gaming applications
- Provisioned IOPS SSD (io2 and io1)
  - Highest performance, durability, and most expensive
  - Use case: demanding transactional applications, I/O-intensive applications, large databases (Microsoft SQL Server and IBM DB2), and latency-sensitive workloads

HDD-backed storage

- Throughput Optimized HDD (st1)
  - Low-cost magnetic storage
  - Defines performance in terms of throughput rather than IOPS
  - Use case: frequently accessed, throughput intensive workloads such as Amazon EMR, ETL, data warehouses, and log processing
  - Cannot be a boot volume
- Cold HDD (sc1)
  - Lowest cost magnetic storage
  - Lower throughput limit than st1
  - Defines performance in terms of throughput rather than IOPS
  - Use case: large, sequential cold-data workloads, less frequently accessed data
  - Cannot be a boot volume

IOPS vs. Throughput

IOPS

- Measures the number of read and write operations per second
- Important metric for quick transactions, low-latency apps, transactional workloads
- The ability to action reads and writes very quickly
- Choose Provisioned IOPS SSD (io1 and io2)

VS

Throughput

- Measures the number of bits read or written per second (MB/s)
- Important metric for large datasets, large I/O sizes, complex queries
- The ability to deal with large datasets
- Choose Throughput Optimized HDD (st1)

Volumes vs. Snapshots

Volumes

- Volumes exist on EBS
- They are virtual hard disks
- You need a minimum of 1 volume per EC2 instance which is called the root device volume
- This is where the OS is installed

Multiple volumes

VS

Snapshots

- Exit on S3
- Point-in-time copy of a volume
- Incremental
- First snapshot may take time to create

Snapshot

Demo: What to know about EBS Volumes

Location

EBS volumes will always be in the same AZ as the EC2 instance to which they are attached

Resizing

You can resize EBS volumes on the fly. You do not need to stop or restart the instance. However, you will need to extend the file system in the OS so the OS can see the resized volume

Volume Type

Switch volume types on the fly (e.g., go from gp3 to io2). You don't need to stop or restart the instance

Protecting EBS Volumes with Encryption

- EBS encrypts your volume with a data key using the industry-standard AES-256 algorithm
- Uses AWS Key Management Service (AWS KMS) and customer master keys (CMK) when creating encrypted volumes and snapshots
- When you encrypt an EBS Volume:
  - Data at rest is encrypted inside the volume
  - All data moving between the instance and the volume is encrypted
  - All snapshots are encrypted
  - All volumes created for the snapshot are encrypted

EBS Encryption Features

- Encryption and decryption are handled transparently
  - You don’t need to do anything
- Encryption has minimal impact on latency
- Copying an unencrypted snapshot allows encryption
- Snapshots of encrypted volumes are encrypted
- Root device volumes can be encrypted upon creation

Demo: 4 Steps to Encrypt Existing Volumes

1. Create a snapshot of the unencrypted root device volume
2. Create a copy of the snapshot and select the encryption option
3. Create an AMI from the encrypted snapshot
4. Use the AMI to launch new encrypted instances

EC2 Hibernation

- If we stop an EC2 instance, the data is kept on the disk (EBS) and will remain on the disk until the EC2 instance is started
- If the instance is terminated, then by default the root device volume will be terminated but we can save this volume if we want to
- When we start EC2 instances:
  - OS boots up
  - Bootstrap scrip is run
  - Applications start

EC2 Hibernation

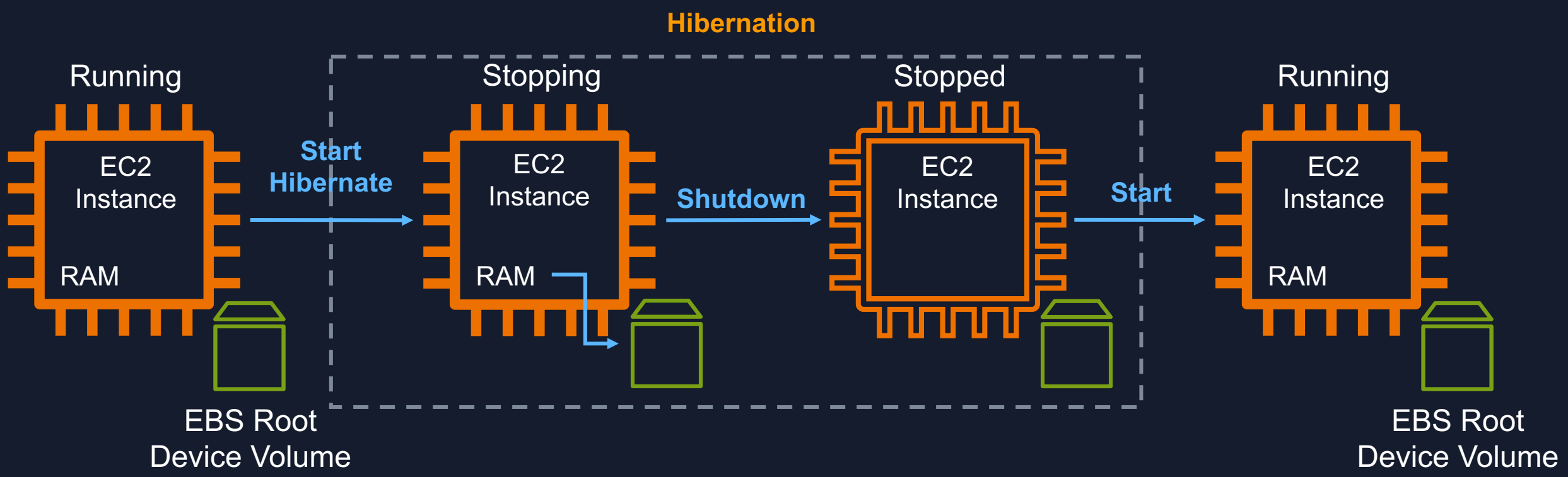

What is an AMI?

- Provides the information required to launch an instance
- Must specify an AMI when you launch an instance
- 5 things you can base your AMI on:

1. Region
2. OS
3. Architecture (32-bit or 64-bit)
4. Launch permissions
5. Storage for the root device (root device volume)

AMI

Demo: EBS vs. Instance Store

EBS

- Root device for instance launched from the AMI is an Amazon EBS volume created from an Amazon EBS snapshot
- EBS-back instances can be stopped
- Will not lose data
- Can reboot an EBS volume and will not lose data
- Volume deleted by default on instance termination

VS

Instance Store

- Root device for instance launched from the AMI is an instance store volume created from a template stored in Amazon S3
- Sometimes called ephemeral storage
- Cannot be stopped
- If underlying host fails, data will be lost
- Can reboot the instance without losing data
- If you delete the instance, the instance store volume will be lost

What is EFS?

- Stands for Elastic File System
- Managed Network File System (NFS) that can be mounted on many EC2 instances
- EFS works with EC2 instances in multiple AZs
- Highly available and scalable; however, it is expensive

Amazon Elastic File System (Amazon EFS)

EFS Use Cases and Features

- Use Cases:
  - Content Management]
  - Web servers
  - Shared database access
- Features:
  - Compatible with Linux-based AMIs
  - Encryption at rest using KMS
  - File system scales automatically; no capacity planning required
  - Pay per use

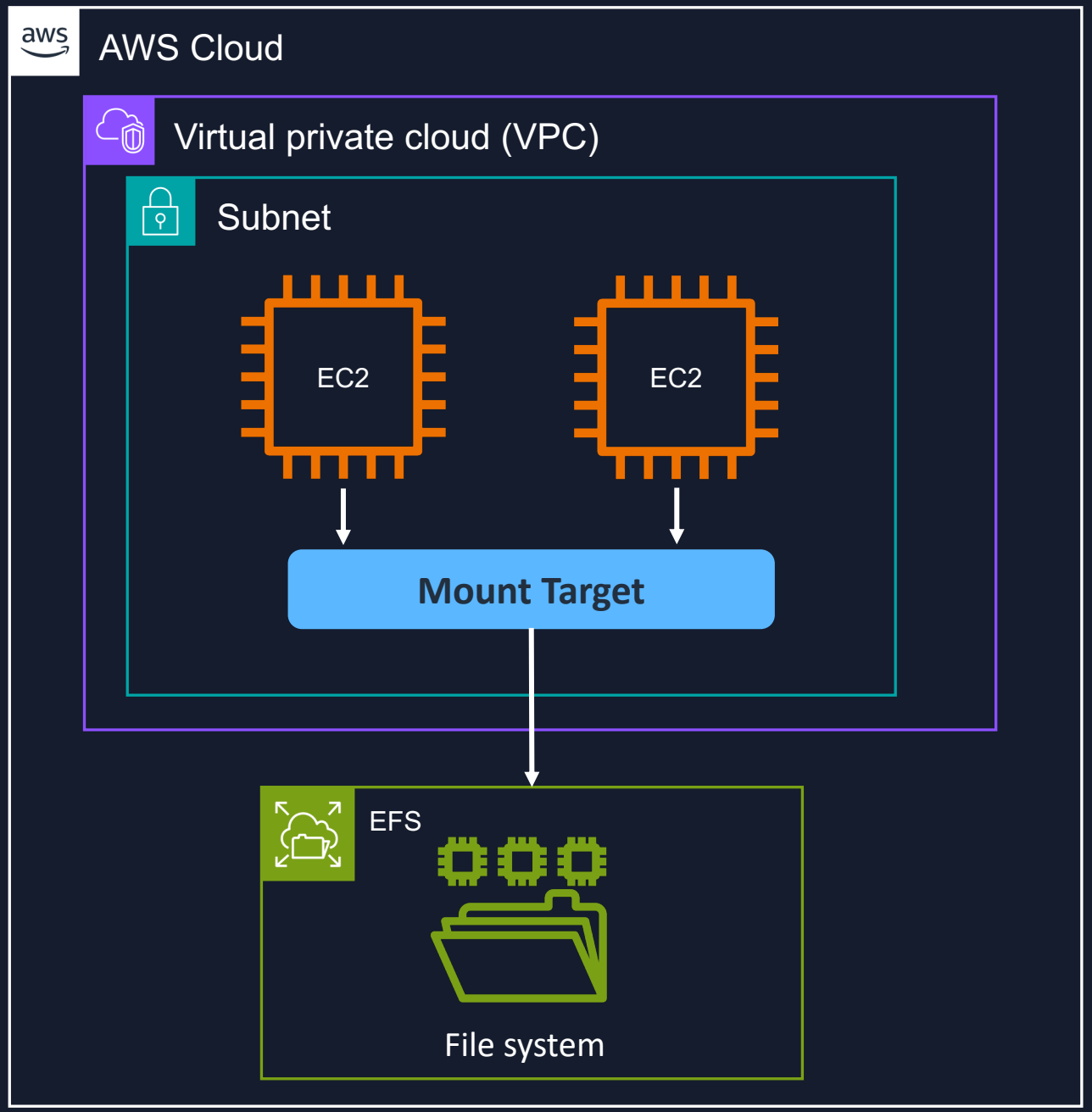

EFS Performance

1000s Concurrent Connections

Can support thousands of concurrent connections (EC2 instances)

10 Gbps Throughput

Can handle up to 10 Gbps in throughput

Petabytes Scaling

Scale your storage to petabytes

Controlling Performance

General Purpose
Webservers, CMS, …

Max I/O
Big data, media processing, …

https://docs.aws.amazon.com/efs/latest/ug/performance.html

EFS Throughput

Elastic

Spiky or unpredictable workloads or performance requirements that are difficult to forecast

Provisioned

When you know your workload's requirements

Bursting

When you want throughput that scales with the amount of storage in your file system

https://docs.aws.amazon.com/efs/latest/ug/performance.html

EFS Storage Tiers

- Comes with storage tiers and lifecycle management which allows you to move data from one tier to another after X number of days

- Storage Tiers:

EFS Standard

EFS Standard–Infrequent Access

EFS Intelligent-Tiering

EFS One Zone

EFS One Zone–Infrequent Access

https://docs.aws.amazon.com/efs/latest/ug/storage-classes.html

What is FSx for Windows File Server?

- Fully managed native MS file system
- Allows you to move windows-based applications that require file storage to AWS
- Built on Windows Server

Amazon FSx

FSx vs. EFS

FSx

- Managed Windows Server that runs Windows Server Message Block (SMB)-based file services
- Designed for Windows and Windows applications
- Supports AD user, ACLs, groups, and security policies, Distributed File System (DFS) namespace and replications

VS

EFS

- Managed NAS file for EC2 instances based on Network File System (NFS) version 4
- One of the first network file sharing protocols native to Unix and Linux

FSx for Lustre

- Fully managed files system that is optimized for compute-intensive workloads
- Can store data directly on S3
- Use cases:
  - High Performance Computing
  - Machine Learning
  - Media Data Processing Workflows
  - Electronic Design Automation

Amazon FSx
for Lustre

Storage Options Summary

- S3: used for serverless object storage
- Glacier: used for archiving objects
- EFS: NFS for Linux instance. Centralized storage solution across multiple AZs
- FSx for Lustre: File storage for HPC, ML, and so on
- EBS Volumes: Persistent storage for EC2 instances
- Instance Store: Ephemeral storage for EC2 instances
- FSx for Windows: File storage for Windows instances. Centralized storage solution across multiple AZs

Checkpoint

True or False? Amazon FSx for Lustre can't store data directly on Amazon S3.

1. False
2. True

You've been tasked with creating a file system for a Linux workload that should support concurrent access to the same file or directory from thousands of compute instances and handle massive datasets, up to hundreds of gigabytes per second. What AWS service would you use?

1. Amazon FSx for Lustre
2. Amazon EBS Provisioned IOPS
3. Amazon FSx
4. Amazon EFS High Performance

You just took a snapshot of an EBS volume. Where is it stored?

1. S3
2. EC2
3. Data Backup Service
4. EFS

You're trying to mount an EBS volume in Availability Zone (AZ) A to an EC2 instance in AZ B. Why isn't it working?

1. You didn't enable cross-AZ for your EBS volume.
2. EC2 instances must be in the same AZ as the EBS volumes.
3. You need to migrate your data to EFS to resolve your block-level storage issues.
4. The EBS service is having a problem and your data can't be read.

What is the best way to ensure the security of both data-at-rest and data-in-transit between an instance and its attached EBS storage?

1. Do nothing. EBS volumes are protected by default.
2. Encrypt the EBS volume.
3. Revoke IAM credentials that would allow users to read the data using the EBS service.
4. Copy your EBS volumes to the AWS Secure Region.

How do you add more storage to EFS?

1. Execute the 'expand_efs_size' API call and specify your new storage size.
2. Create a new, larger EBS volume and designate it as shared EFS storage in the configuration page.
3. Create a new, larger EFS volume to swap with your smaller one.
4. No action is needed, as AWS will automatically size EFS based on your usage.

What is the purpose of an Amazon Machine Image (AMI)?

1. It provides you with an always-up-to-date OS for your EC2 instance.
2. It's a template to create a new EC2 instance from.
3. It's a type of database structure that can be deployed to RDS.
4. It's a type of EC2 instance that you'll select during creation of an instance.

Amazon Web Services: Elastic Block Store (EBS) and Elastic File System (EFS)